Perimeter

To find the perimeter of a shape, add the lengths of all its sides.

Find the perimeter of each shape in cm.

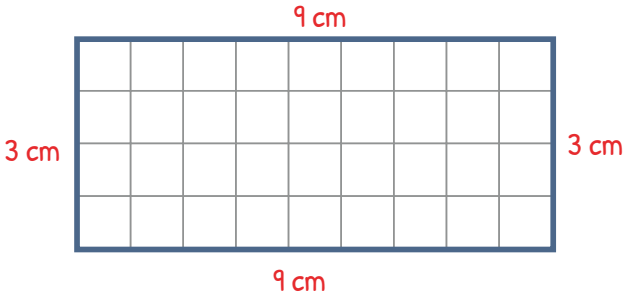

P = ☐ cm

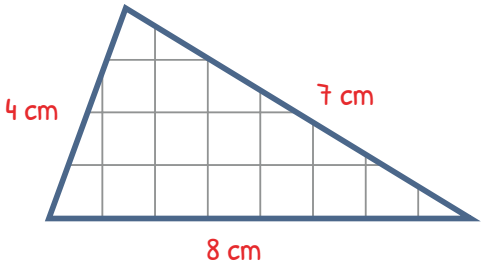

P = ☐ cm

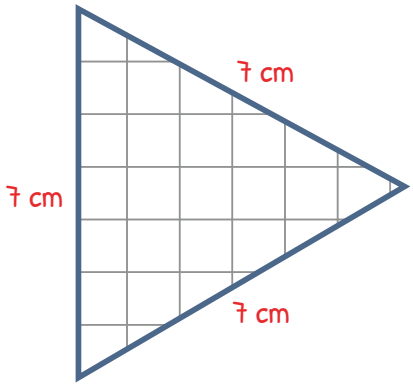

P = ☐ cm

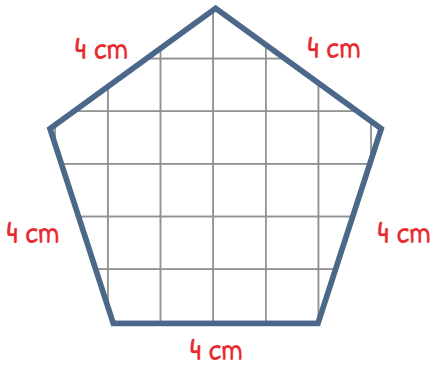

P = ☐ cm

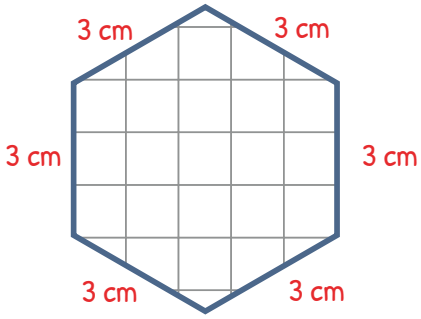

P = ☐ cm

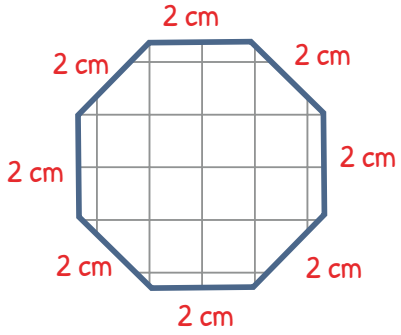

P = ☐ cm

Perimeter

To find the perimeter of a shape, add the lengths of all its sides.

Find the perimeter of each shape in cm.

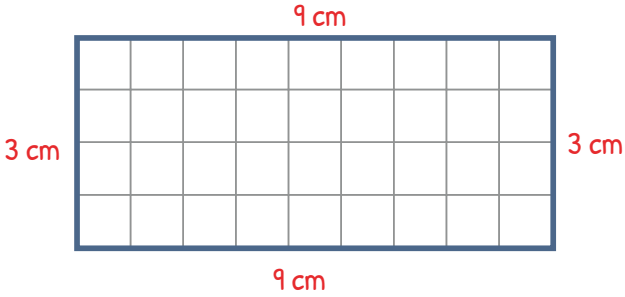

P = 3 cm + 9 cm + 3 cm + 9 cm

P = 24 cm

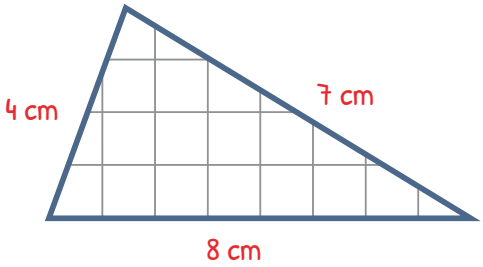

P = 4 cm + 7 cm + 8 cm

P = 19 cm

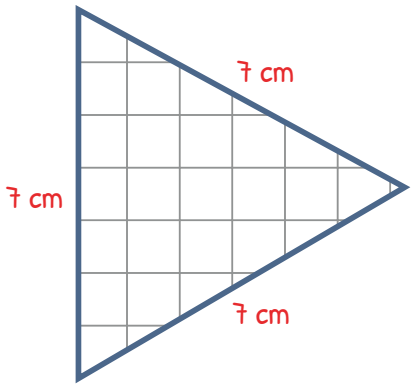

P = 7 cm + 7 cm + 7 cm

P = 21 cm

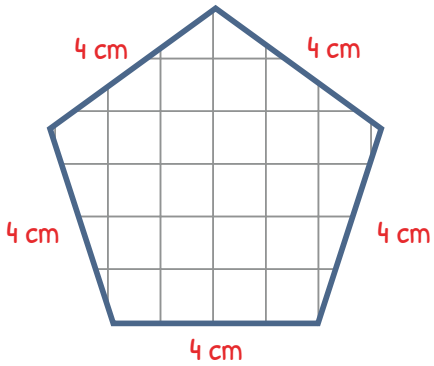

P = 4 cm + 4 cm + 4 cm + 4 cm + 4 cm

P = 20 cm

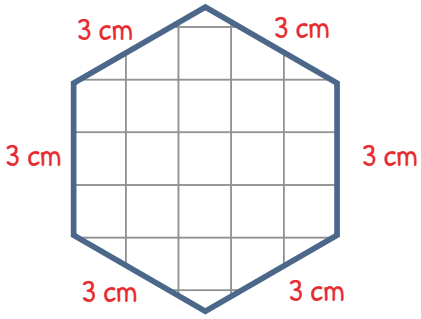

P = 3 cm + 3 cm + 3 cm + 3 cm + 3 cm + 3 cm

P = 18 cm

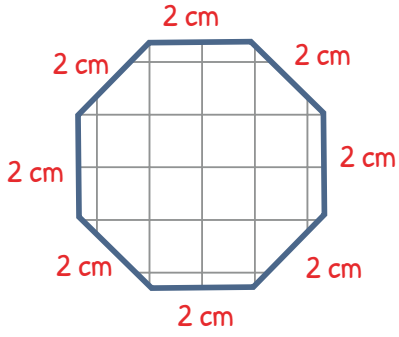

P= 2 cm + 2 cm + 2 cm + 2 cm + 2 cm + 2 cm + 2 cm + 2 cm

P = 16 cm